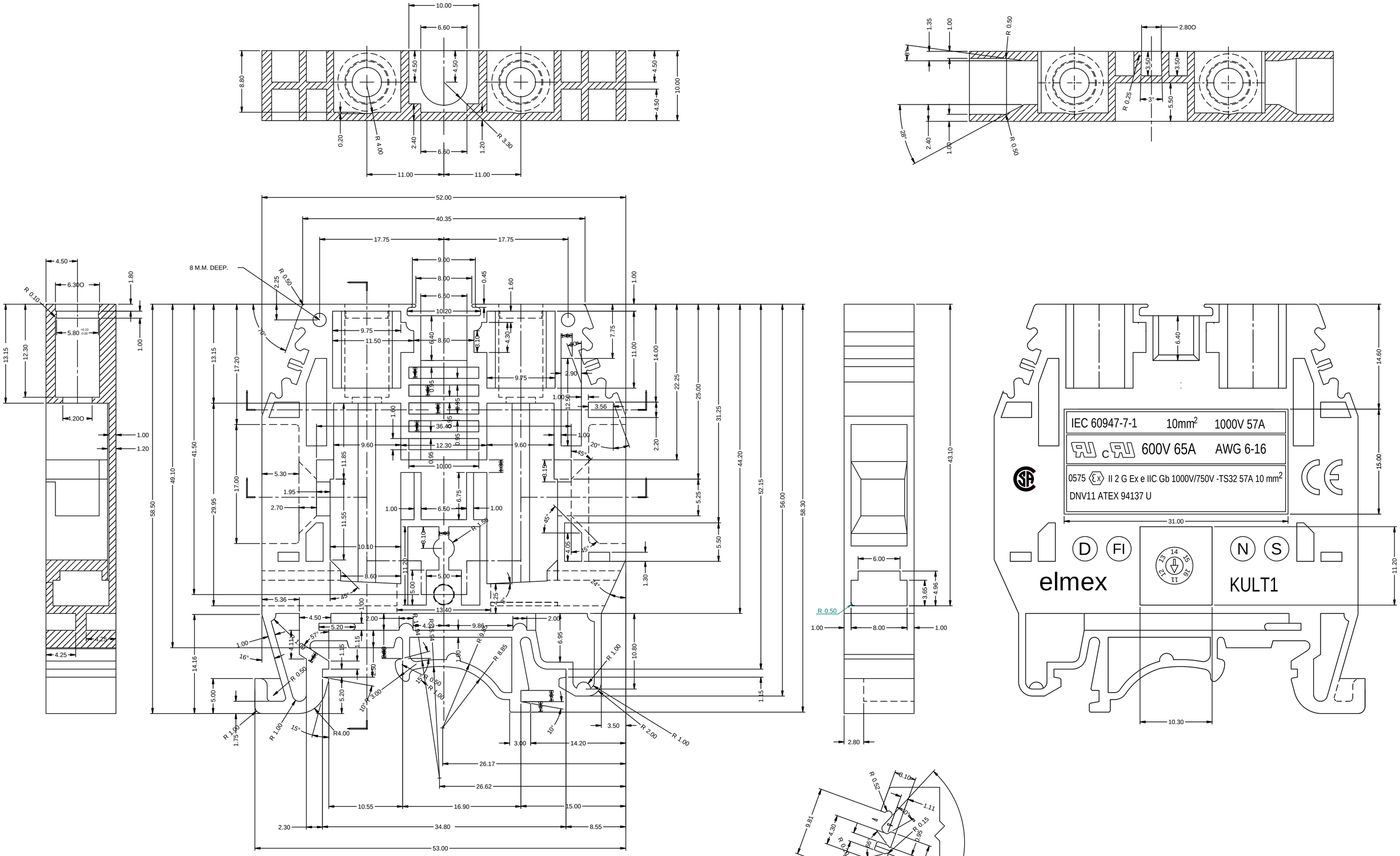

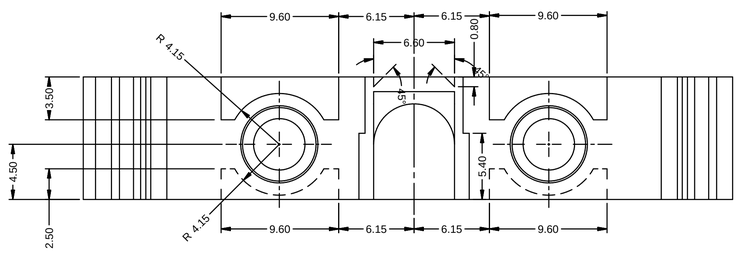

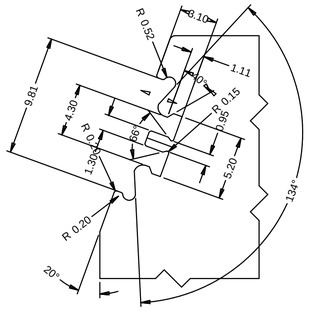

FREE DIMENSION TOLERANCES (REF. DIN 16901)																						
ABOVE	0	1	3	6	10	15	22	30	40	53	70	90	120	160	200	250	315	400	500	630	800
UP TO	1	3	6	10	15	22	30	40	53	70	90	120	160	200	250	315	400	500	630	800	1000
TOLERANCE	±0.10	±0.11	±0.12	±0.14	±0.17	±0.20	±0.24	±0.28	±0.33	±0.40	±0.50	±0.60	±0.75	±0.95	±1.15	±1.45	±1.80	±2.20	±2.80	±3.50	±4.40

REV. No.	REVISION DETAIL	ECR No.	MODIFY BY	DATE
4	SCREVE HOLE RIB DIMENSION CHANGED 6.00 TO 5.80-0.10/-0.00	2016/04/08	SIDDHU	27-04-2016
3	Added 0.5mm radious on spring rest area	2012/08/03	BBP	04-08-2012

IF ANY DOUBT PLEASE ASK — REMOVE ALL SHARP EDGES — ALL DIMENSIONS ARE IN "mm"

ELMEX CONTROLS Pvt. Ltd.
12, GIDC, MAKARPURA,
VADODARA - 390010

DRAWN BY	IPK	DATE	03-08-2008
CHKD. BY	SIDDHU	DATE	27-04-2016
APPROVED BY	DL	DATE	27-04-2016

MATERIAL	PA66
MSI No.	029
FINISH	
WEIGHT	Error: No reference

THIRD ANGLE PROJECTION — SCALE NTS — SHEET 1 OF 1 — SHEET SIZE A1

DESCRIPTION: HOUSING

DRG. NUMBER: 6KULT1HN — REV 4

* CRITICAL DIMENSION

© copyright - Elmex Controls Pvt. Ltd.

Solid Edge ST3 Drawing