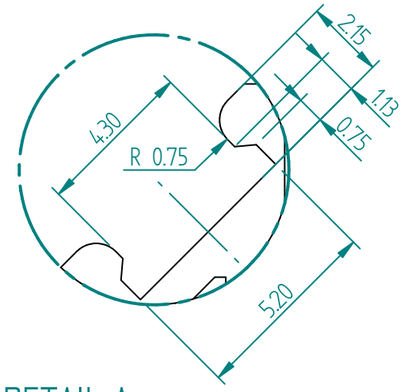

DETAIL A

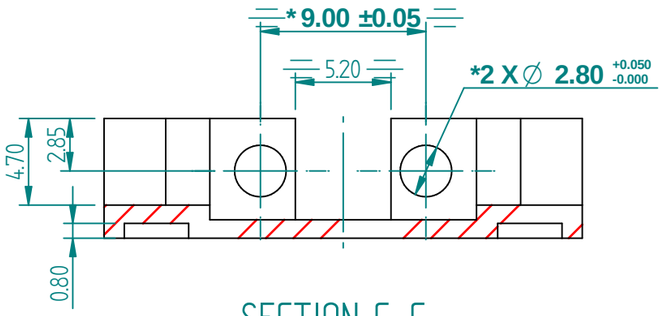

SECTION C-C

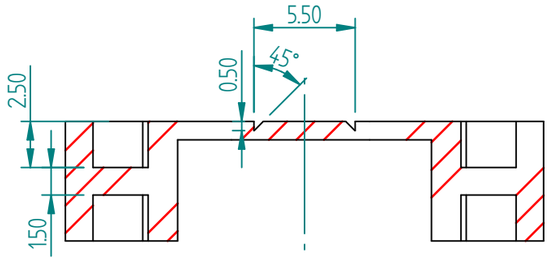

SECTION D-D

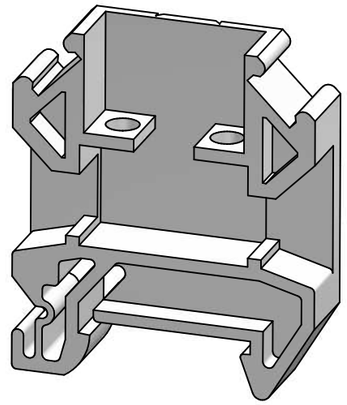

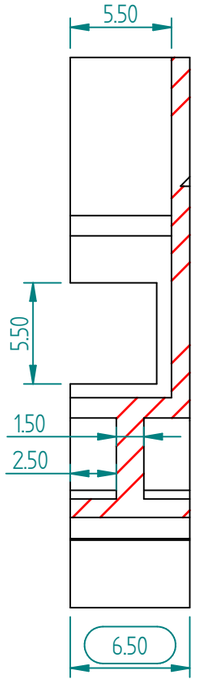

SECTION B-B

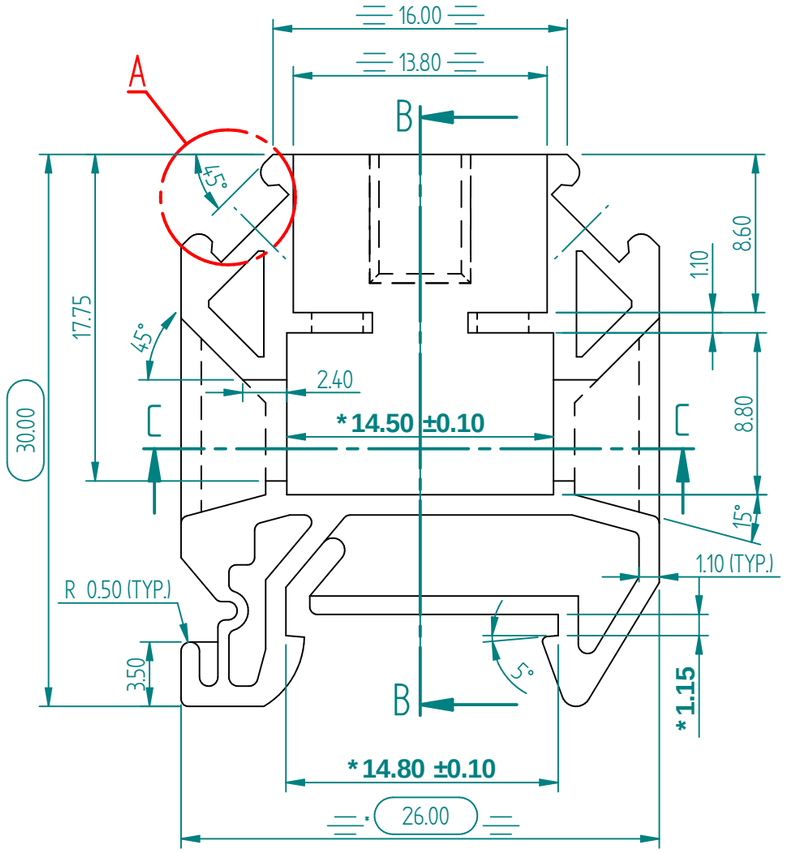

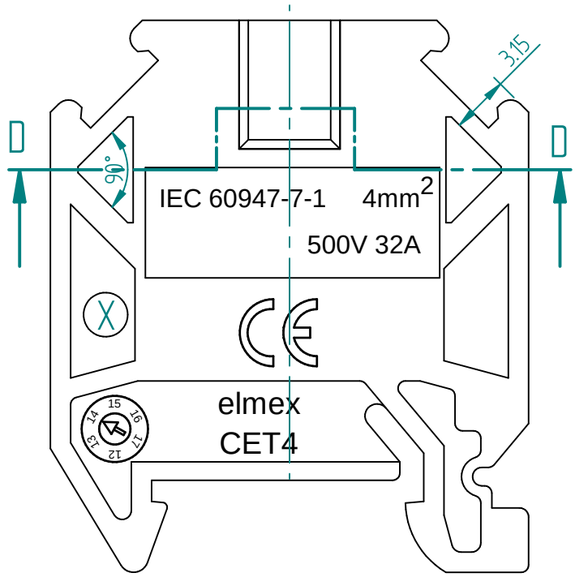

* CRITICAL DIMENSION

© copyright - Elmex Controls Pvt. Ltd.

FREE DIMENSION TOLERANCES (REF. DIN 16901)

ABOVE	0	1	3	6	10	15	22	30	40	53	70	90	120	160	200	250	315	400	500	630	800
UP TO	1	3	6	10	15	22	30	40	53	70	90	120	160	200	250	315	400	500	630	800	1000
TOLERANCE	±0.10	±0.11	±0.12	±0.14	±0.17	±0.20	±0.24	±0.28	±0.33	±0.40	±0.50	±0.60	±0.75	±0.95	±1.15	±1.45	±1.80	±2.20	±2.80	±3.50	±4.40

REV. No.	REVISION DETAIL	ECR No.	MODIFY BY	DATE
2	14.80 was 15.00, 14.50 was 14.25, 2.50 was 2.60, 9.00 +/_ 0.05 was 9.00		SVV	28-08-2014

IF ANY DOUBT PLEASE ASK | REMOVE ALL SHARP EDGES | ALL DIMENSIONS ARE IN "mm"

ELMEX CONTROLS Pvt. Ltd.
12, GIDC, MAKARPURA,
VADODARA - 390010

MATERIAL	PA 66		
MSI No.	029		
DRAWN BY	IPK	DATE	23-.6-2006
CHKD. BY	SVV	DATE	30-07-2014
APPROVED BY	TR	DATE	01-08-2014
FINISH			
WEIGHT	2.04 g		
FIRST ANGLE PROJECTION	SCALE NTS	DESCRIPTION	HOUSING
SHEET 1 OF 1	SHEET SIZE A3	DRG. NUMBER	6CET4H_Modified Design
		REV	2

EC-F/73/3/08B...03rd Dec 2010...Ver100

Solid Edge ST3 Drawing